International Journal of Academic Multidisciplinary Research (IJAMR)
ISSN: 2643-9670
Vol. 4, Issue 8, August – 2020, Pages: 108-111

Deformed State of Straight Sections of Pipelines under the Influence of External Loads

Aslonov Bakhtiyor Bobokulovich, Kholova Shohista Abdurashidovna, Rakhmonov Kakhramon Sanokulovich

Bukhara Engineering Technological Institute, Uzbekistan.
E-mail: qaxa8004@mail.ru

***Abstract**: The article explores trunk pipelines and pipelines of enterprises in the energy, petrochemical and other industries that make up a large part of their tangible assets. As a rule, pipelines are very highly loaded structures, since even during their design, in order to save metal, practically the lowest safety factors are studied.*

Keywords: Trunk pipelines, highly loaded pipelines, deformations and stresses, computer simulation, analytical modeling.

INTRODUCTION

This requires a very precise justification of strength and resource under all possible types of loading. Such an analysis is impossible without the use of modern computing systems.

At the same time, the calculator needs to understand in advance the nature of the solution, and the numerical results should only clarify some of the coefficients. It is important to know the features of the deformation of a structure with its geometrically nonlinear behavior, taking into account that even for an ideally elastic material, a slight increase in load can lead to an uncontrolled increase in deformations and stresses. In addition, the modern standards for the design of equipment for nuclear power plants [1, 2, 3] and the norms for assessing operating structures with detected imperfections [4] provide for the division of design stresses into different categories, to which different safety factors are applied. Without understanding the features of the deformation of various elements, achieved by analytical modeling, it is impossible to use the provisions of these standards. To solve the problem stated above, the finite element method and computer simulation were used.

MATERIALS AND METHODS

The mathematical model of the system is based on dynamic three-dimensional equations of the linear theory of viscoelasticity according to the Kelvin-Voigt rheological model:

$$\nabla \cdot \sigma + \mathcal{F}_{\gamma} = \rho \frac{d^2\mathcal{U}}{dt^2}, \mathcal{E} = (\nabla\mathcal{U})2, \sigma = \lambda\theta E + 2\mu\,\varepsilon + 2\eta\dot{e}$$

where σ, ε are stress and strain tensors; ε is the deviator of the strain tensor ε = ε-θ⁄3 E; E is the unit tensor; u = u (r, t), fv = fv (r, t) are vectors of displacement and given volumetric forces that depend on the time t and the radius of the vector of points of the continuous medium r; λ, μ, η-Lamé coefficients and material viscosity; ρ-density; θ-volumetric deformation; Hamilton ∇-differential operator. The presented differential formulation of the problem of the theory of viscoelasticity is equivalent to a variational formulation in the form of the principle of possible displacements:

$$\int_V \delta\mathbf{u}\cdot\mathbf{f}_v\,dV + \int_S \delta\mathbf{u}\cdot\mathbf{f}_S\,dS + \int_V \delta\mathbf{u}\cdot\mathbf{f}_{inert}dV = \delta\pi$$

where δu is the vector of possible displacements of points of a continuous medium; the integrals on the left represent the work of external volumetric and surface forces.

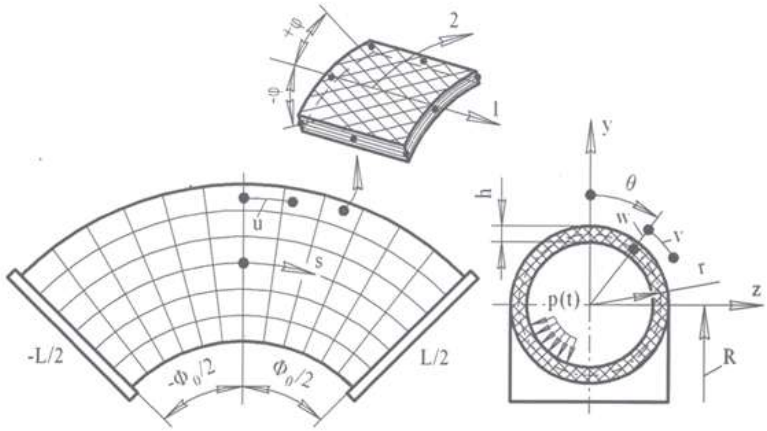

Fig. 1. Calculation scheme

International Journal of Academic Multidisciplinary Research (IJAMR)
ISSN: 2643-9670
Vol. 4, Issue 8, August – 2020, Pages: 108-111

$$F_{intert} = -p\frac{D^2u}{D\,t^2}$$

and also forces of inertia on possible displacements;
δπ - virtual work of internal forces during body deformation:

$$\partial\pi = \int v\ \partial \in \cdot\ \sigma\ dV$$

To numerically solve this equation, we applied the standard procedure of finite element discretization in spatial variables using a 20-node isoparametric element $\partial\pi = \int v\ \partial \in \cdot\ \sigma\ dV$

Taking into account the form of the constitutive relation written in matrix form using matrices of elastic and viscous modules D and

$$S{:}\delta = D\varepsilon + Se,$$

the following matrix differential equation in time is obtained:

$M\frac{d^2U}{dt^2} + R\frac{dU}{dt} + KU = F(t)$ where U=U(t) , F = F(t) — global vectors of nodal displacements and nodal forces as a function of time, K, M, R are global matrices of stiffness, masses and dissipation. Further transformation is based on the standard approach used in the linear theory of elastic vibrations [6]. Suppose that the external load changes in time according to a harmonic law, which can be written as:

$\mathbf{F(t) = F_e}\ ^{\mathbf{i\omega t}}, \mathbf{F \in R_e}$**where** F,ω- force amplitude and circular frequency, i - imaginary unit Then the particular solution corresponding to the steady-state forced oscillations of the system is sought in a similar form:

$U(t) = U_e\ ^{i\omega t}, U_1 + iU_2$where U - global vector of complex amplitudes of nodal displacements; U, and U2 are the real and imaginary parts, respectively.

Substituting the expressions of force and displacement into the differential equation, we obtain a system of complex algebraic equations for the vector of complex amplitudes of nodal displacements:

$$-M\omega^2 + R_{i\omega+}K)U = F$$

After solving the last system, the amplitude values of the nodal accelerations are calculated according to the following formula:

$$a = \omega^2\sqrt{U_1^2\ \ + U_1^2}$$

DISCUSSION

To begin with, the work deduces the equation of dynamics for curved rods. A feature of the structure operation under dynamic action is the need to take into account the inertial forces associated with the relative displacement of the point of the deformable body. Fundamentally, this problem is solved by adding an inertial term to the right-hand side of the equilibrium equation, which after the addition is called the equation of motion. Therefore, for static problems, this term is not taken into account. The system of equations of the 12th order is solved problematically. But even if it is solved, a problem arises - the unification of the rods into a single system. For a curved bar, the local coordinate system is determined by the Frenet trihedral. To connect two or more rods into a single system, you need to be able to convert local coordinates into global ones. The presented algorithm is implemented in the form of the author's software package MATLAB and allows calculating the viscoelastic steady-state vibrations of mechanical structures under the action of an external harmonic force. It is known that if the stress concentration is not considered, then a small number of finite elements are sufficient to describe elastic vibrations. Taking into account that the model uses high-order elements with quadratic approximation of displacements, then only 62 finite elements were used. The global number of degrees of freedom of the pipeline model was 1242.

The retainer material (stainless steel alloy) is characterized by an elastic modulus of E = 206 GPa, a shear modulus of G = 80 GPa and a density of p = 7000 kg / m3. One of the sources of elastic vibrations of pipes and pipelines are pressure pulsations of the working medium. Under the influence of pulsations, the pipe performs the usual forced vibrations associated with the expansion-compression of the wall (the pipe “breathes”). Under certain conditions, stationary vibration modes become dynamically unstable, and parametric resonance develops in the system. The results of studying the stability of axisymmetric vibration modes of rectilinear pipes as thin-walled cylindrical shells are presented in numerous works, for example [4]. A distinctive feature of parametric vibrations of curved tubes is the presence, along with simple resonances, of combination resonances of the total type [4]. Consider a pipe (Fig. 1), the axial line of which is an arc of a circle of radius R, length L, with a central angle (bend angle) Φ0. The pipe has a perfectly circular cross-section of radius r

with r / R <1/5. Wall thickness h. The pipe is under the influence of monoharmonic pressure p (t) = pm (1 + ψ cosΩt), where rt is the average (working) pressure, - ψ = p0 / pm * 1 is the pulsation parameter; p0 and Ω - amplitude, angular frequency. The

International Journal of Academic Multidisciplinary Research (IJAMR)
ISSN: 2643-9670
Vol. 4, Issue 8, August – 2020, Pages: 108-111

perturbed form corresponding to the deviation of motion from the unperturbed one is approximated by functions of the form: $\omega(s,\theta,t) = \sum_{n=1}^{\infty}[W_{1n}(s,t)\cos n\theta W_{2n}(s,t)\sin n\theta]$

$$\omega(s,\theta,t) = \sum_{n=1}^{\infty}[W_{1n}(s,t)\sin n\theta W_{2n}(s,t)\cos n\theta]$$

$$\left[W_{m1}(s,t) = W_{m1}\left(1-\cos\frac{\pi s}{L}\right), W_{mn}(s,t) = \cos\cos\frac{\pi s}{L}\right]$$

RESULT

Here v and w are the displacements of the points of the middle surface in the circumferential and radial directions, s and θ are the axial and circumferential coordinates, t is the time, wmn = wmn (t) ~ generalized coordinates corresponding to the pivotal (m = 1,2 and n = I) and shell (m = 1.2 and n = 2, 3.4, ...) forms. Index m = 1 corresponds to vibrations in the plane of the pipe, index m = 2 - to vibrations along the normal to the plane. The rod (beam) shape reflects the movements associated with the movements of the cross-section of the pipe as a rigid whole, the shell forms - the movements associated with the deformation of the shell wall. We consider n = 2, 3,4, ... ∞ waves in the circumferential direction and one half-wave in the axial direction. Based on approximation (1), the semi-momentless theory of anisotropic layered shells, and Lagrange equations of the second kind, two independent systems of coupled differential equations with variable stiffness coefficients are obtained

$$[A]\{w\} + 2\varepsilon[B]\{w\} + \alpha([C] - 2\mu[F]\cos \mathbf{\Omega} t)\{w\} = \mathbf{0}, \qquad (2)$$

which describe parametric vibrations of the pipe, both in the plane of its curvature and along the normal to the plane. In this case, α = 6πD2 / (mTr3) is a factor, тт = Iπphr is the mass of a unit length of the pipe, D2 = E2h3 / (l2 (l-v12v21)) is the stiffness of the wall for bending in the circumferential direction, E2, v12, v21 are the effective elastic constants [4], μ = 0.5 p0 / pкp coefficient of parametric excitation, pкp = 3D2 / r3 - critical external pressure corresponding to static buckling, ε - damping coefficient, fm = пг-1. The elements of the matrices [A], [B], [C] are determined by recursive formulas [4].

The resolving system of equations (2) describes the parametric vibrations of a coupled shell-and-rod system. The source of parametric excitation is a periodic change in the volume of the internal cavity. At the same time, the pressure "works" not on the main (axisymmetric) displacements, but on additional displacements associated with bending deformations of the wall.

From the analysis of the structure of the matrix [C] it follows that the rod form (n = 1) is associated with the shell form (n = 2). This means that vibrations of the pipe as a rod are accompanied by vibrations of the shell wall associated with flattening of the cross section (the Karman effect appears). The interaction of the rod and shell forms is due to elastic bonds, the intensity of which is characterized by off-diagonal matrix elements [C] and depends on the pipe length L and the curvature parameter r / R. The shorter the pipe and the larger the r / R parameter, the stronger these connections are. In addition, the shell forms interact with each other: separately n - even harmonics (n = 2, 4, 6, ...) and n - odd harmonics (u = 3, 5, 7, ...). The smaller the radius of curvature R and the larger the number n, the stronger the interaction. Under the conditions of the nominal operating mode, the ideal pipe is considered as a parametrically excited system with a small modulation depth of the parameter μ. We restrict the analysis of the stability of elastic vibrations to the region of the lowest natural frequencies. To calculate the boundaries of the instability regions at the main simple resonances Ω = 2ωi and the main combination resonances Ω = ωi, + ωj (i, j = 1,2,5), we use the small parameter method [6]. We represent the perturbed form of movement as a superposition of its own forms. To solve the eigenvalue problem, we use the Jacobi method. The report presents the results of a study of the dependence of the spectra of the lowest natural forms and frequencies on the operating pressure, as well as geometric, structural and technological factors. The results obtained are compared with the FEM calculation data.

The pictures of resonant bands are shown depending on the angle Φ0 = 5 °, 90 °, 135 °, 180 ° (at L = const) and reinforcement angles φ = ± 55 °, ± 65 °, ± 75 °. It was found that with a decrease in the curvature of the pipe, the lowest natural frequency ω increases, while the higher frequencies ω2, ω3, ω4, ω5, on the contrary, decrease and approach the natural frequencies of a straight pipe. In this case, the regions of dynamic instability are shifted towards different values of 0.1 (2 ωx), and the relative width of the bands narrows. At Φ0 = 5 °, the instability regions 2 ω1, and ω1, + ω2 practically disappear.

With an increase in the reinforcement angles ± φ, the regions of dynamic instability corresponding to the main simple and main combination resonances shift towards large values of Ω (2ω1). In this case, the instability regions 2ω and ω1 + ω2 narrow, and the instability regions 2 ω2, 2 ω3, 2 ω4, 2 ω5 and ω2 + ω4, ω3 + ω5, on the contrary, expand.

Table 1
The values of the critical bending moment Mkr for a pipe with initial curvature of the axis

γ_0	**MCR**

	Received results	Literary source	
		[3]	[98]
0	0,322		ода
0,1	0,282	0,281	0,285
0,2	0,247	0,254	0,254
0,3	0,167	0,191	0,190

Table 1 shows the values of the critical bending moment M cr for pipes with the initial curvature of the Ro axis, calculated on the basis of the refined solution. As expected, the critical moment values decrease with an increase in the initial and

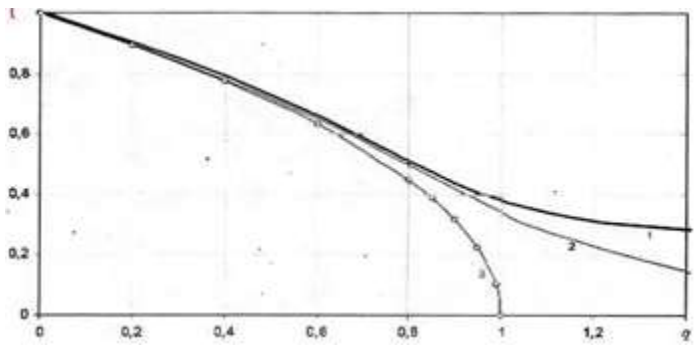

Fig. 2. Limiting curves under the combined action of bending moment and pressure for a straight pipe: 1 - our results; 2 - data [2]; 3 - data [3].

CONCLUSION

Let us construct the dependence of the critical bending moment on pressure in normalized coordinates t and q (Fig. 2). The graph represents the limit curve 1, which characterizes the combination of loading leading to loss of stability. For points that lie in the plane bounded by this curve, the level of torque and pressure loading does not correspond to buckling. The points above the curve correspond to such a combination of loads, for which the loss of pipe stability is inevitable.

In the region q <0 (internal pressure), all the graphs practically coincide; therefore, in Fig. 2 they are given for the region q> 0.

REFERENCES

1. Avliyakulov N.N., Safarov I.I. Modern problems of statics and dynamics of underground pipelines. Tashkent, Fan vatexnologiya. 2007.306 p.
2. Bazarov MB Safarov I.I., Shokin Yu.M. Numerical modeling of oscillations of dissipative-inhomogeneous and homogeneous mechanical systems.-Novosibirsk, Siberian department. RAS, 1996.-189 p.
3. Zenkevich O. The finite element method in technology. M .: Mir, 1975.-634s.
4. API 579. Recommended Practice Fitness-for-Service, First Edition. - American Petroleum Institute, January 2000.